The Error–Dissipation Tradeoff when Computing with Time-Symmetric Protocols

Paul M. Riechers

in collaboration with

Alec B. Boyd, Gregory W. Wimmsat,
James P. Crutchfield, and Mile Gu

Complexity Institute, and School of Physical and Mathematical Sciences
Nanyang Technological University, Singapore

Workshop on Stochastic Thermodynamics of Complex Systems
CSH Vienna, Zooming in from Singapore
May 28th 2020

NANYANG TECHNOLOGICAL UNIVERSITY SINGAPORE

What are the thermodynamic limits of computation?

What are the thermodynamic limits of computation?

Landauer's bound?

- $k_{\mathrm{B}}T \ln 2$ of heat to compress state space in a binary reset

Essentially restates the Second Law of thermodynamics—that entropy production is expected to be non-negative: $\langle \mathbf{\Sigma} \rangle \geq 0$

$\implies$ The bound can only be achieved in the quasistatic limit, and assumes no control restrictions

What are the *nonequilibrium* thermodynamic limits of *realistic* computation?

What are the *nonequilibrium* thermodynamic limits of *realistic* computation?

Nonequilibrium: Finite duration

Realistic: Control constraints

~~**Landauer's bound?**~~

Stronger constraints on entropy production?

What are the *nonequilibrium* thermodynamic limits of *realistic* computation?

Nonequilibrium: Finite duration

Realistic: Control constraints

We will show that
metastable memories and **time-symmetric control**
together imply an
error–dissipation tradeoff for any computation $\mathcal{C}$

What are the *nonequilibrium* thermodynamic limits of *realistic* computation?

Nonequilibrium: Finite duration

Realistic: Control constraints

We will show that
metastable memories and **time-symmetric control**
together imply an
error–dissipation tradeoff for any computation $\mathcal{C}$

$$\langle \mathbf{\Sigma}_{\min}^{t\text{-sym}} \rangle \sim f(\mathcal{C}, \dagger) \ln(1/\epsilon)$$

where ϵ is the error tolerance, and $\dagger$ describes the time-reversal symmetries of the memory elements

Memory must be physically embedded; Memory only exists among alternatives

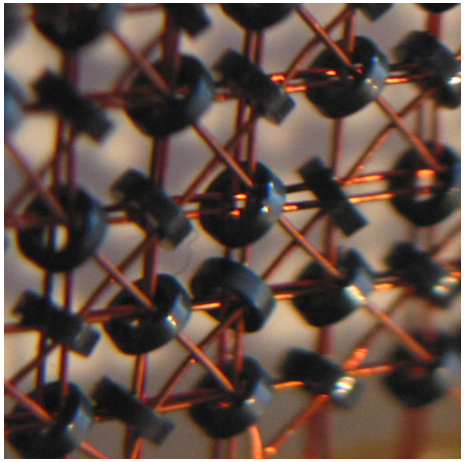

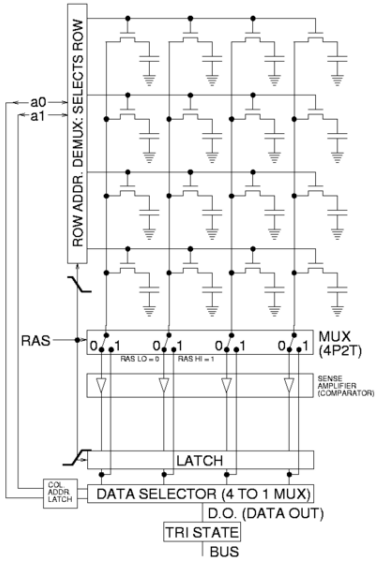

non-volatile memory
$\dot{Q}_{\mathrm{hk}} = 0$

volatile memory
$\dot{Q}_{\mathrm{hk}} > 0$

Consider non-volatile memory.
(Add housekeeping penalty for volatile memory.)

Memory

Memory must be physically embedded.
Memories partition the microstates of a physical memory system.

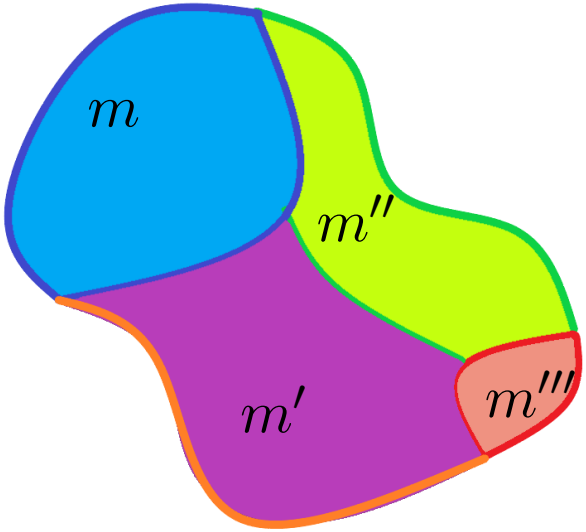

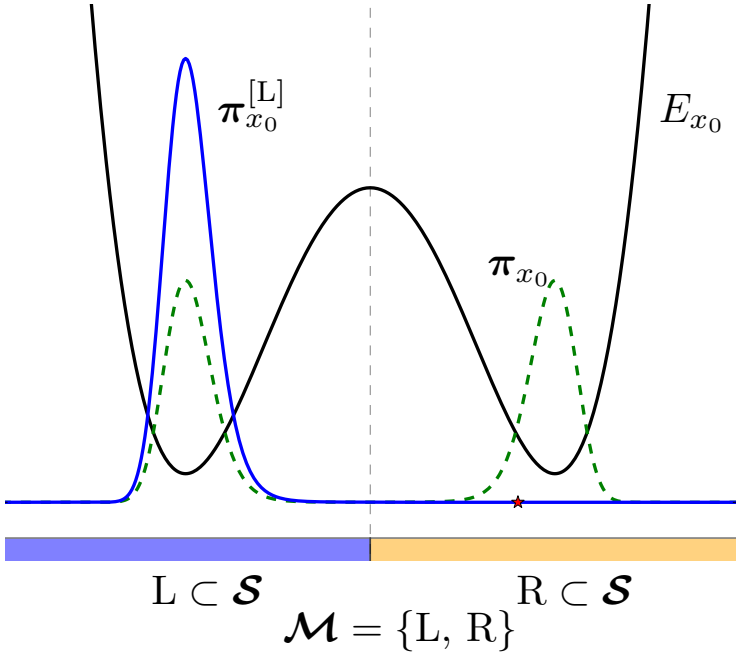

$m \subset \boldsymbol{\mathcal{S}}, \quad \bigcup_{m \in \boldsymbol{\mathcal{M}}} m = \boldsymbol{\mathcal{S}}$

Memory is stored metastably between computations.

Computation

Physical transformation via ephemeral control $x_{0:\tau}$

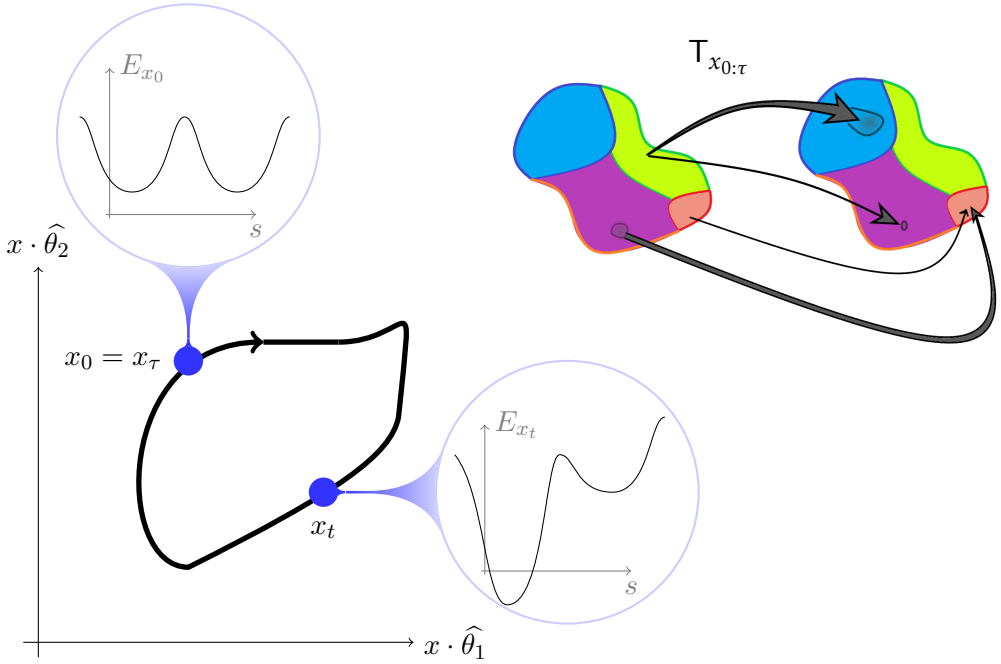

Physical transformation implements stochastic computation $p(\mathcal{M}_\tau|\mathcal{M}_0)$

Paul M. Riechers, "Transforming Metastable Memories: the Nonequilibrium Thermodynamics of Computation." In D. Wolpert, C. Kempes, P. Stadler, and J. Grochow, editors, *The Energetics of Computing in Life and Machines*. SFI Press, 2019.

Computation

Physical transformation via ephemeral control $x_{0:\tau}$

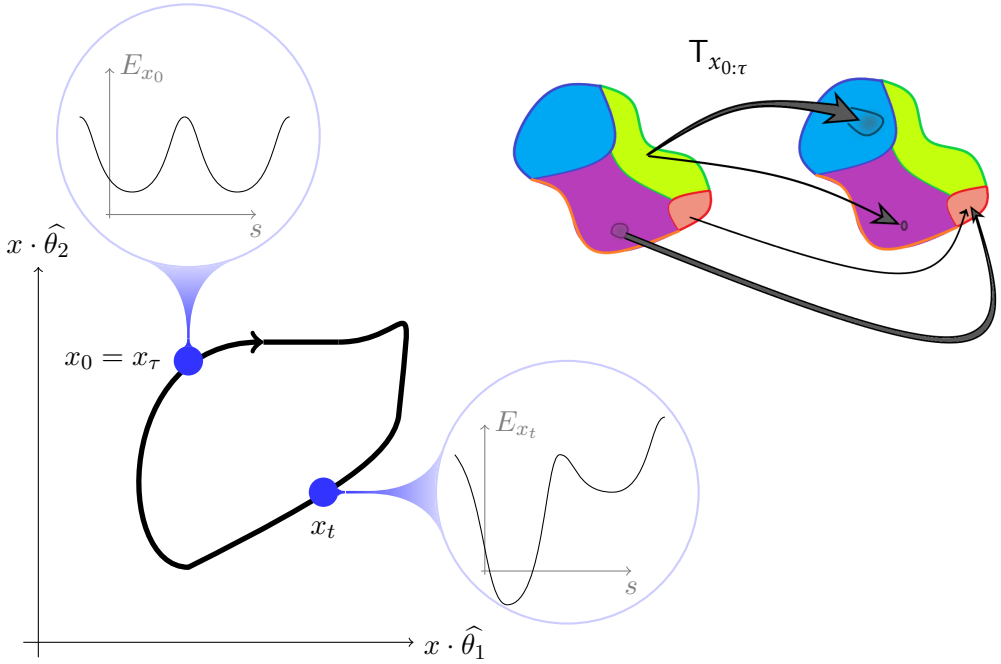

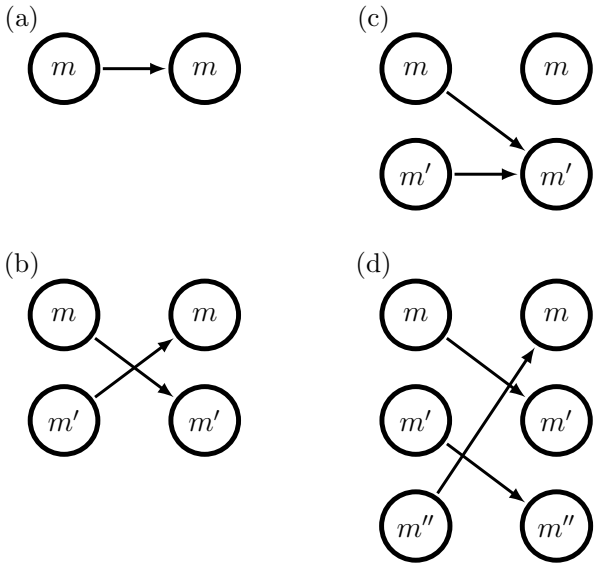

Physical transformation implements stochastic computation $p(\mathcal{M}_\tau|\mathcal{M}_0)$

In nearly-deterministic case:
$\mathcal{C} : \boldsymbol{\mathcal{M}} \to \boldsymbol{\mathcal{M}}$ with error tolerance ϵ

Paul M. Riechers, "Transforming Metastable Memories: the Nonequilibrium Thermodynamics of Computation." In D. Wolpert, C. Kempes, P. Stadler, and J. Grochow, editors, *The Energetics of Computing in Life and Machines*. SFI Press, 2019.

Metastable Memory Storage

Memories are metastable between computations if

$$\boldsymbol{\mu}_0^{[m]} \approx \boldsymbol{\mu}_\tau^{[m]} \approx \boldsymbol{\pi}_{x_0}^{[m]}$$

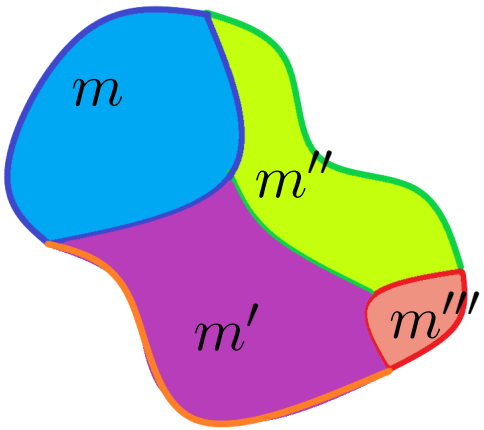

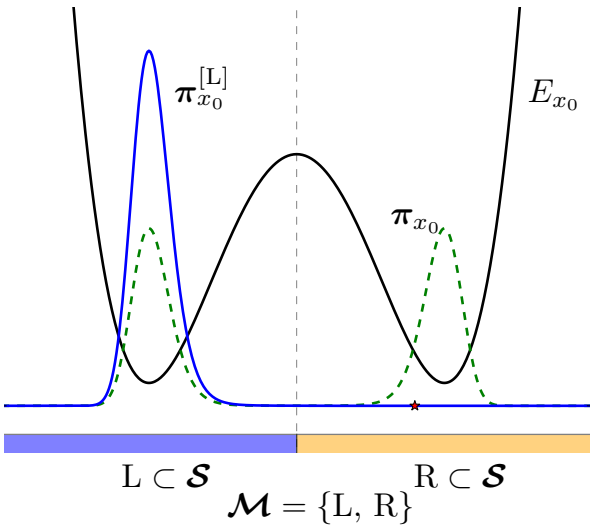

Then, $\boldsymbol{\mu}_t \approx \sum_{m \in \boldsymbol{\mathcal{M}}} \boldsymbol{\mu}_t(m) \boldsymbol{\pi}_{x_0}^{[m]}$ at $t = 0, \tau$

Paul M. Riechers, "Transforming Metastable Memories: the Nonequilibrium Thermodynamics of Computation." In D. Wolpert, C. Kempes, P. Stadler, and J. Grochow, editors, *The Energetics of Computing in Life and Machines*. SFI Press, 2019.

Example: Erasure to L

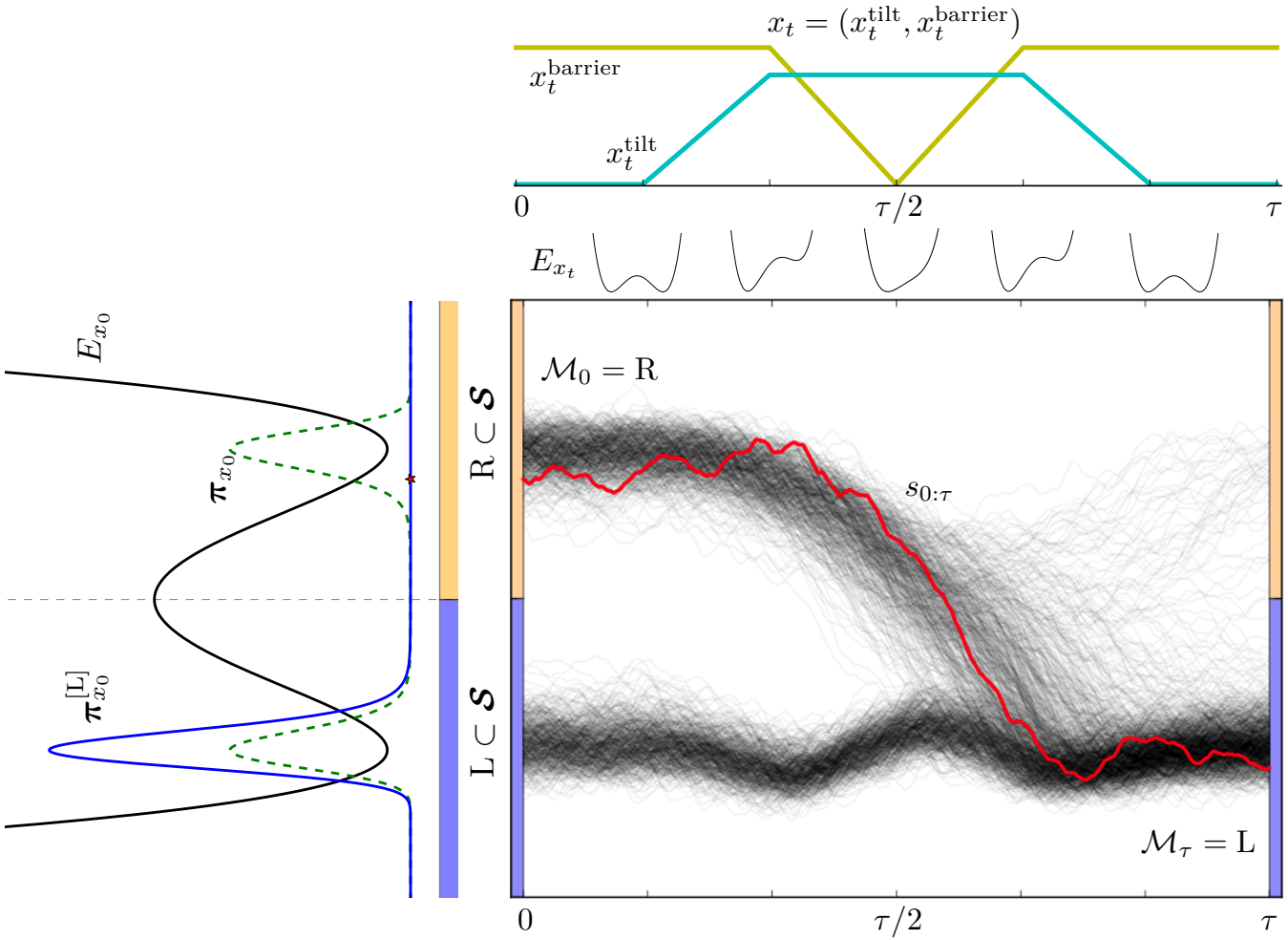

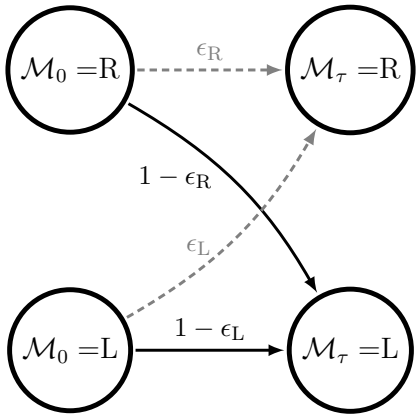

$$\boldsymbol{\mu}_t \approx \sum_{m \in \boldsymbol{\mathcal{M}}} \boldsymbol{\mu}_t(m) \boldsymbol{\pi}_{x_0}^{[m]} \text{ at } t = 0, \tau$$

Main results can be derived in either classical or quantum setting (will stick with classical limit here)

- System is prepared with an initial distribution $\boldsymbol{\mu}_0$ over microstates
- Each bath is initially in local equilibrium
- Nonequilibrium driving $x_{0:\tau}$ controls Hamiltonian of joint system–baths megasystem

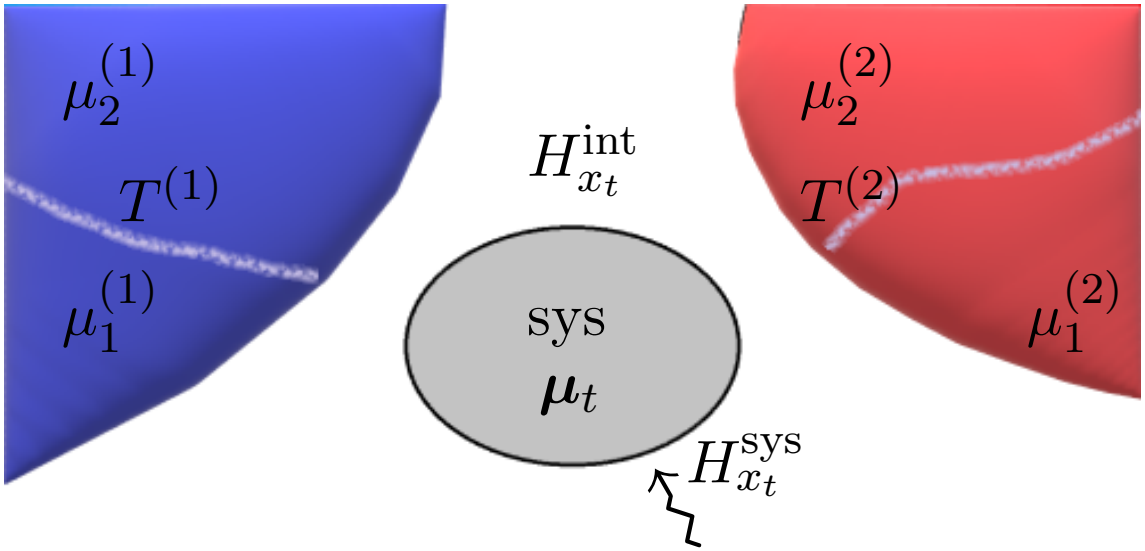

Entropy Flow: $$\Phi_{\text{env}} = \sum_{b \in \mathcal{B}} \frac{Q^{(b)}}{T^{(b)}} - \frac{1}{T^{(b)}} \sum_k \mu_k^{(b)} \Delta N_k^{(b)} \ ,$$

Surprisal of System State: $$S_{\text{sys}} = -k_{\text{B}} \ln \boldsymbol{\mu}_t(s_t)$$

Entropy Production:
$$\boldsymbol{\Sigma} = \Phi_{\text{env}} + \Delta S_{\text{sys}}$$

2nd Law

$$\langle \boldsymbol{\Sigma} \rangle \geq 0$$

$\Longrightarrow$

Landauer's bound

$$\langle \Phi_{\text{env}} \rangle \geq -\Delta \langle S_{\text{sys}} \rangle$$

Thermodynamic Implications of Memory Transitions

the Detailed Fluctuation Theorem

$$\frac{\Pr_{x_{0:\tau}}\left(\mathcal{S}_{0:\tau} = s_{0:\tau}, \Phi_{\text{env}} = \phi | \mathcal{S}_0 = s_0\right)}{\Pr_{\mathbf{Я}(x_{0:\tau})}\left(\tilde{\mathcal{S}}_{0:\tau} = \mathbf{Я}(s_{0:\tau}), \tilde{\Phi}_{\text{env}} = -\phi | \tilde{\mathcal{S}}_0 = s_\tau^\dagger\right)} = e^{\phi/k_{\text{B}}}$$

(Jarzynski, JStatPhys, 2000)

$$s_{0:\tau} = s_0 s_{\tau/N} \dots s_\tau$$

non-Markovianity is non-problematic

Thermodynamic Implications of Memory Transitions

the Detailed Fluctuation Theorem

$$\frac{\Pr_{x_{0:\tau}}\left(\mathcal{S}_{0:\tau} = s_{0:\tau}, \Phi_{\text{env}} = \phi | \mathcal{S}_0 = s_0\right)}{\Pr_{\mathbf{Я}(x_{0:\tau})}\left(\tilde{\mathcal{S}}_{0:\tau} = \underbrace{\mathbf{Я}(s_{0:\tau})}_{s_\tau^\dagger \ldots s_0^\dagger}, \tilde{\Phi}_{\text{env}} = -\phi | \tilde{\mathcal{S}}_0 = s_\tau^\dagger\right)} = e^{\phi/k_{\text{B}}}$$

(Jarzynski, JStatPhys, 2000)

E.g.,

$$s = (\vec{q}, \vec{\wp}) \;\rightarrow\; s^\dagger = (\vec{q}, -\vec{\wp})$$

Thermodynamic Implications of Memory Transitions

the Detailed Fluctuation Theorem

$$\frac{\Pr_{x_{0:\tau}}\left(\mathcal{S}_{0:\tau} = s_{0:\tau}, \Phi_{\text{env}} = \phi | \mathcal{S}_0 = s_0\right)}{\Pr_{\mathbf{\mathfrak{R}}(x_{0:\tau})}\left(\tilde{\mathcal{S}}_{0:\tau} = \mathbf{\mathfrak{R}}(s_{0:\tau}), \tilde{\Phi}_{\text{env}} = -\phi | \tilde{\mathcal{S}}_0 = s_\tau^\dagger\right)} = e^{\phi/k_{\text{B}}}$$

(Jarzynski, JStatPhys, 2000)

$$\rightarrow \mathbf{\Sigma} = k_{\text{B}} \ln \frac{\boldsymbol{\mu}_0(s_0) \Pr_{x_{0:\tau}}\left(\mathcal{S}_{0:\tau} = s_{0:\tau}, \Phi_{\text{env}} = \phi | \mathcal{S}_0 = s_0\right)}{\boldsymbol{\mu}_\tau(s_\tau) \Pr_{\mathbf{\mathfrak{R}}(x_{0:\tau})}\left(\tilde{\mathcal{S}}_{0:\tau} = \mathbf{\mathfrak{R}}(s_{0:\tau}), \tilde{\Phi}_{\text{env}} = -\phi | \tilde{\mathcal{S}}_0 = s_\tau^\dagger\right)}$$

Thermodynamic Implications of Memory Transitions

the Detailed Fluctuation Theorem

$$\frac{\Pr_{x_{0:\tau}}\left(\mathcal{S}_{0:\tau} = s_{0:\tau}, \Phi_{\text{env}} = \phi | \mathcal{S}_0 = s_0\right)}{\Pr_{\mathbf{\mathfrak{R}}(x_{0:\tau})}\left(\tilde{\mathcal{S}}_{0:\tau} = \mathbf{\mathfrak{R}}(s_{0:\tau}), \tilde{\Phi}_{\text{env}} = -\phi | \tilde{\mathcal{S}}_0 = s_\tau^\dagger\right)} = e^{\phi/k_{\text{B}}}$$

(Jarzynski, JStatPhys, 2000)

$$\rightarrow \mathbf{\Sigma} = k_{\text{B}} \ln \frac{\boldsymbol{\mu}_0(s_0) \Pr_{x_{0:\tau}}\left(\mathcal{S}_{0:\tau} = s_{0:\tau}, \Phi_{\text{env}} = \phi | \mathcal{S}_0 = s_0\right)}{\boldsymbol{\mu}_\tau(s_\tau) \Pr_{\mathbf{\mathfrak{R}}(x_{0:\tau})}\left(\tilde{\mathcal{S}}_{0:\tau} = \mathbf{\mathfrak{R}}(s_{0:\tau}), \tilde{\Phi}_{\text{env}} = -\phi | \tilde{\mathcal{S}}_0 = s_\tau^\dagger\right)}$$

$$= k_{\text{B}} \ln \frac{\rho(\mathcal{S}_{0:\tau} = s_{0:\tau})}{\rho^R(\mathcal{S}_{0:\tau} = s_{0:\tau})} + k_{\text{B}} \ln \frac{\mathcal{P}(\Phi_{\text{env}} = \phi | \mathcal{S}_{0:\tau} = s_{0:\tau})}{\mathcal{R}(\Phi_{\text{env}} = \phi | \mathcal{S}_{0:\tau} = s_{0:\tau})}$$

a new and useful decomposition for entropy production

$$\boldsymbol{\Sigma} = k_{\mathrm{B}} \ln \frac{\rho(\mathcal{S}_{0:\tau} = s_{0:\tau})}{\rho^R(\mathcal{S}_{0:\tau} = s_{0:\tau})} + k_{\mathrm{B}} \ln \frac{\mathcal{P}(\Phi_{\mathrm{env}} = \phi | \mathcal{S}_{0:\tau} = s_{0:\tau})}{\mathcal{R}(\Phi_{\mathrm{env}} = \phi | \mathcal{S}_{0:\tau} = s_{0:\tau})}$$

where

$$\rho(\mathcal{S}_{0:\tau} = s_{0:\tau}) \equiv \Pr_{x_{0:\tau}} \left(\mathcal{S}_{0:\tau} = s_{0:\tau} | \mathcal{S}_0 \sim \boldsymbol{\mu}_0 \right)$$

$$\rho^R(\mathcal{S}_{0:\tau} = s_{0:\tau}) \equiv \Pr_{\boldsymbol{\mathfrak{R}}(x_{0:\tau})} \left(\tilde{\mathcal{S}}_{0:\tau} = \boldsymbol{\mathfrak{R}}(s_{0:\tau}) | \tilde{\mathcal{S}}_0 \sim \boldsymbol{\mu}_\tau^\dagger \right)$$

$$\boldsymbol{\mu}_\tau^\dagger(s) = \boldsymbol{\mu}_\tau(s^\dagger)$$

$$\mathcal{P}(\Phi_{\mathrm{env}} = \phi | \mathcal{S}_{0:\tau} = s_{0:\tau}) \equiv \Pr_{x_{0:\tau}} \left(\Phi_{\mathrm{env}} = \phi | \mathcal{S}_{0:\tau} = s_{0:\tau} \right)$$

$$\mathcal{R}(\Phi_{\mathrm{env}} = \phi | \mathcal{S}_{0:\tau} = s_{0:\tau}) \equiv \Pr_{\boldsymbol{\mathfrak{R}}(x_{0:\tau})} \left(\tilde{\Phi}_{\mathrm{env}} = -\phi | \mathcal{S}_{0:\tau} = \boldsymbol{\mathfrak{R}}(s_{0:\tau}) \right)$$

a new and useful decomposition for entropy production

$$\mathbf{\Sigma} = k_{\mathrm{B}} \ln \frac{\rho(\mathcal{S}_{0:\tau} = s_{0:\tau})}{\rho^R(\mathcal{S}_{0:\tau} = s_{0:\tau})} + k_{\mathrm{B}} \ln \frac{\mathcal{P}(\Phi_{\mathrm{env}} = \phi | \mathcal{S}_{0:\tau} = s_{0:\tau})}{\mathcal{R}(\Phi_{\mathrm{env}} = \phi | \mathcal{S}_{0:\tau} = s_{0:\tau})}$$

$$\frac{1}{k_{\mathrm{B}}} \langle \mathbf{\Sigma} \rangle = \mathrm{D}_{\mathrm{KL}} \left[\rho(\mathcal{S}_{0:\tau}) \middle\| \rho^R(\mathcal{S}_{0:\tau}) \right] + \mathrm{D}_{\mathrm{KL}} \left[\mathcal{P}(\Phi_{\mathrm{env}} | \mathcal{S}_{0:\tau}) \middle\| \mathcal{R}(\Phi_{\mathrm{env}} | \mathcal{S}_{0:\tau}) \right]$$

Tighter than Landauer's bound

a new and useful decomposition for entropy production

$$\mathbf{\Sigma} = k_{\mathrm{B}} \ln \frac{\rho(\mathcal{S}_{0:\tau} = s_{0:\tau})}{\rho^R(\mathcal{S}_{0:\tau} = s_{0:\tau})} + k_{\mathrm{B}} \ln \frac{\mathcal{P}(\Phi_{\mathrm{env}} = \phi | \mathcal{S}_{0:\tau} = s_{0:\tau})}{\mathcal{R}(\Phi_{\mathrm{env}} = \phi | \mathcal{S}_{0:\tau} = s_{0:\tau})}$$

$$\begin{aligned} \frac{1}{k_{\mathrm{B}}} \langle \mathbf{\Sigma} \rangle &= \mathrm{D}_{\mathrm{KL}} \left[\rho(\mathcal{S}_{0:\tau}) \middle\| \rho^R(\mathcal{S}_{0:\tau}) \right] + \mathrm{D}_{\mathrm{KL}} \left[\mathcal{P}(\Phi_{\mathrm{env}} | \mathcal{S}_{0:\tau}) \middle\| \mathcal{R}(\Phi_{\mathrm{env}} | \mathcal{S}_{0:\tau}) \right] \\ &\geq \mathrm{D}_{\mathrm{KL}} \left[\rho(\mathcal{S}_{0:\tau}) \middle\| \rho^R(\mathcal{S}_{0:\tau}) \right] \end{aligned}$$

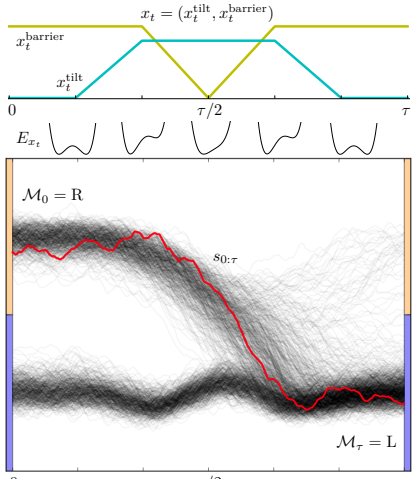

a new and useful decomposition for entropy production

$$\boldsymbol{\Sigma} = k_{\mathrm{B}} \ln \frac{\rho(\mathcal{S}_{0:\tau} = s_{0:\tau})}{\rho^R(\mathcal{S}_{0:\tau} = s_{0:\tau})} + k_{\mathrm{B}} \ln \frac{\mathcal{P}(\Phi_{\mathrm{env}} = \phi | \mathcal{S}_{0:\tau} = s_{0:\tau})}{\mathcal{R}(\Phi_{\mathrm{env}} = \phi | \mathcal{S}_{0:\tau} = s_{0:\tau})}$$

$$\begin{aligned} \frac{1}{k_{\mathrm{B}}} \langle \boldsymbol{\Sigma} \rangle &= \mathrm{D}_{\mathrm{KL}} \left[\rho(\mathcal{S}_{0:\tau}) \middle\| \rho^R(\mathcal{S}_{0:\tau}) \right] + \mathrm{D}_{\mathrm{KL}} \left[\mathcal{P}(\Phi_{\mathrm{env}} | \mathcal{S}_{0:\tau}) \middle\| \mathcal{R}(\Phi_{\mathrm{env}} | \mathcal{S}_{0:\tau}) \right] \\ &\geq \mathrm{D}_{\mathrm{KL}} \left[\rho(\mathcal{S}_{0:\tau}) \middle\| \rho^R(\mathcal{S}_{0:\tau}) \right] \end{aligned}$$

This is importantly distinct from superficially similar previous results from Jarzynski '06, Kawai '07, Gomez-Marin '08, Parrondo '09, Roldan '10, etc. (Previous results assumed either initial equilibrium—which wipes out memory—or NESS.)

Dependence on $\boldsymbol{\mu}_0$ and $\boldsymbol{\mu}_\tau^\dagger$ is crucial to address thermodynamics of general memory transformations.

Tighter than Landauer's bound

a new and useful decomposition for entropy production

$$\mathbf{\Sigma} = k_{\mathrm{B}} \ln \frac{\rho(\mathcal{S}_{0:\tau} = s_{0:\tau})}{\rho^R(\mathcal{S}_{0:\tau} = s_{0:\tau})} + k_{\mathrm{B}} \ln \frac{\mathcal{P}(\Phi_{\mathrm{env}} = \phi | \mathcal{S}_{0:\tau} = s_{0:\tau})}{\mathcal{R}(\Phi_{\mathrm{env}} = \phi | \mathcal{S}_{0:\tau} = s_{0:\tau})}$$

$$\begin{aligned}
\frac{1}{k_{\mathrm{B}}} \langle \mathbf{\Sigma} \rangle &= \mathrm{D_{KL}}\left[\rho(\mathcal{S}_{0:\tau}) \,\middle\|\, \rho^R(\mathcal{S}_{0:\tau})\right] + \mathrm{D_{KL}}\left[\mathcal{P}(\Phi_{\mathrm{env}}|\mathcal{S}_{0:\tau}) \,\middle\|\, \mathcal{R}(\Phi_{\mathrm{env}}|\mathcal{S}_{0:\tau})\right] \\
&\geq \mathrm{D_{KL}}\left[\rho(\mathcal{S}_{0:\tau}) \,\middle\|\, \rho^R(\mathcal{S}_{0:\tau})\right] \\
&\geq \mathrm{D_{KL}}\left[\rho(\mathcal{M}_0, \mathcal{M}_\tau) \,\middle\|\, \rho^R(\mathcal{M}_0, \mathcal{M}_\tau)\right] .
\end{aligned}$$

Coarse grain over both time and state space.

Microstate trajectories $\mapsto$ Memory-state bookends

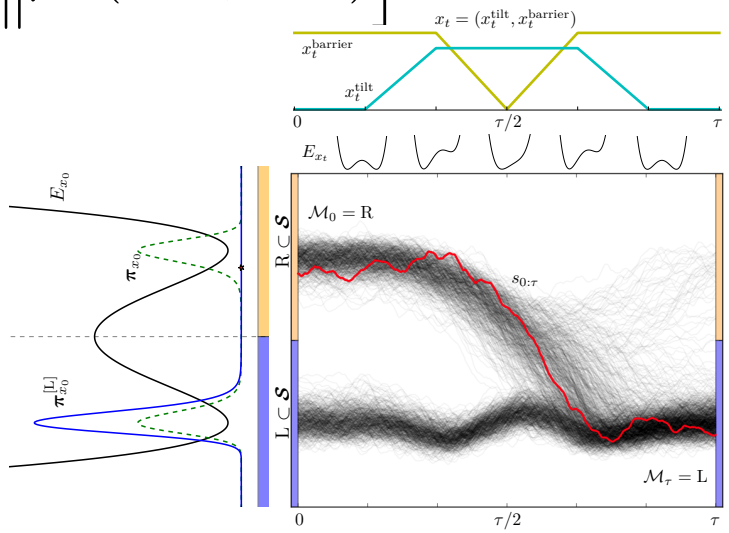

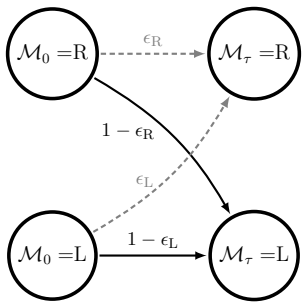

Requirement for dissipationless computing

Physics, meet computation:

$$\frac{1}{k_{\mathrm{B}}} \langle \boldsymbol{\Sigma} \rangle \geq \mathrm{D}_{\mathrm{KL}} \Big[\underbrace{\rho(\mathcal{M}_0, \mathcal{M}_\tau)}_{\boldsymbol{\mu}_0(m) \Pr\left(\boldsymbol{\mu}_0^{[m]} \xrightarrow{x_{0:\tau}} m'\right)} \Big\| \underbrace{\rho^R(\mathcal{M}_0, \mathcal{M}_\tau)}_{\boldsymbol{\mu}_\tau(m') \Pr\left(\boldsymbol{\mu}_\tau^{\dagger[m'\dagger]} \xrightarrow{\boldsymbol{\mathfrak{R}}(x_{0:\tau})} m^\dagger\right)} \Big]$$

Zero dissipation requires *density reversibility*:

$$\underbrace{\Pr\left(\boldsymbol{\mu}_\tau^{\dagger[m'\dagger]} \xrightarrow{\boldsymbol{\mathfrak{R}}(x_{0:\tau})} m^\dagger\right)}_{\text{physics}} = \underbrace{\frac{\boldsymbol{\mu}_0(m)\ p(m \to m')}{\boldsymbol{\mu}_\tau(m')}}_{\text{computation}} .$$

PM Riechers, AB Boyd, GW Wimsatt, JP Crutchfield, "Balancing Error and Dissipation in Highly-Reliable Computing", arXiv:1909.06650

Requirement for dissipationless computing

Physics, meet computation:

$$\frac{1}{k_{\mathrm{B}}}\langle \boldsymbol{\Sigma} \rangle \geq \mathrm{D}_{\mathrm{KL}}\Big[\underbrace{\rho(\mathcal{M}_0, \mathcal{M}_\tau)}_{\boldsymbol{\mu}_0(m)\,\Pr\left(\boldsymbol{\mu}_0^{[m]} \xrightarrow{x_{0:\tau}} m'\right)} \Big\| \underbrace{\rho^R(\mathcal{M}_0, \mathcal{M}_\tau)}_{\boldsymbol{\mu}_\tau(m')\,\Pr\left(\boldsymbol{\mu}_\tau^{\dagger[m'\dagger]} \xrightarrow{\boldsymbol{\mathfrak{R}}(x_{0:\tau})} m^\dagger\right)} \Big]$$

Zero dissipation requires *density reversibility*:

$$\underbrace{\Pr\left(\boldsymbol{\mu}_\tau^{\dagger[m'\dagger]} \xrightarrow{\boldsymbol{\mathfrak{R}}(x_{0:\tau})} m^\dagger\right)}_{\text{physics}} = \underbrace{\frac{\boldsymbol{\mu}_0(m)\; p(m \to m')}{\boldsymbol{\mu}_\tau(m')}}_{\text{computation}} .$$

Positional Storage | Spin Storage

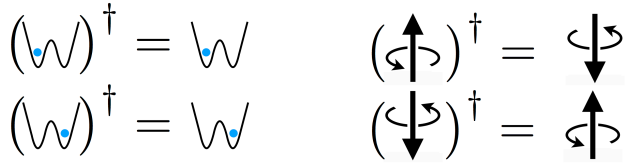

Time-reversal symmetry of memory elements matters for thermodynamics!

Often, practical constraints require time-symmetric control.

Often, practical constraints require time-symmetric control.

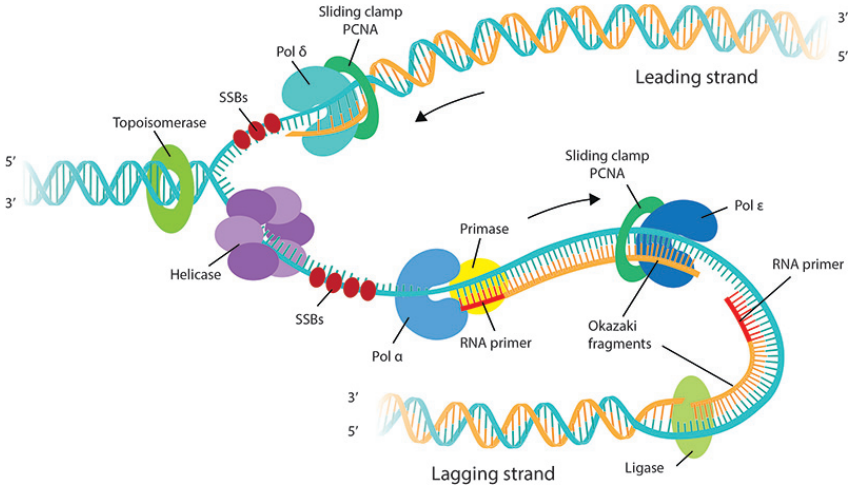

E.g., Biological transformations at very low Reynolds numbers!

Often, practical constraints require time-symmetric control.

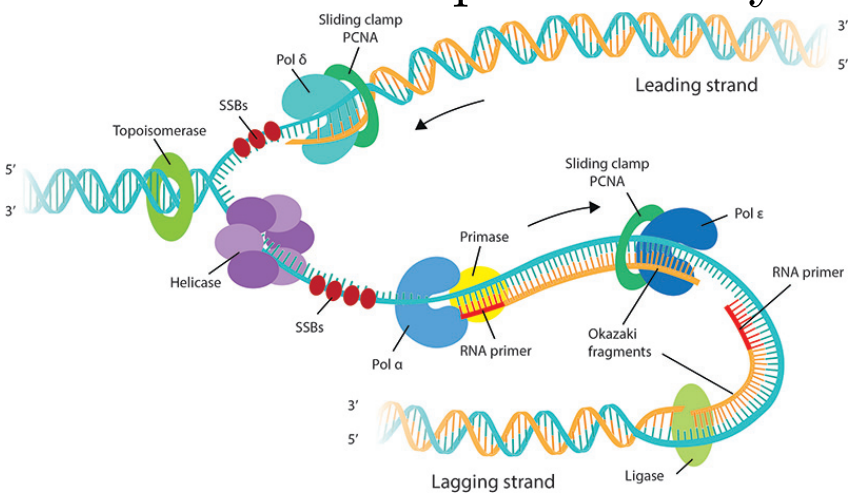

E.g., Biological transformations at very low Reynolds numbers!

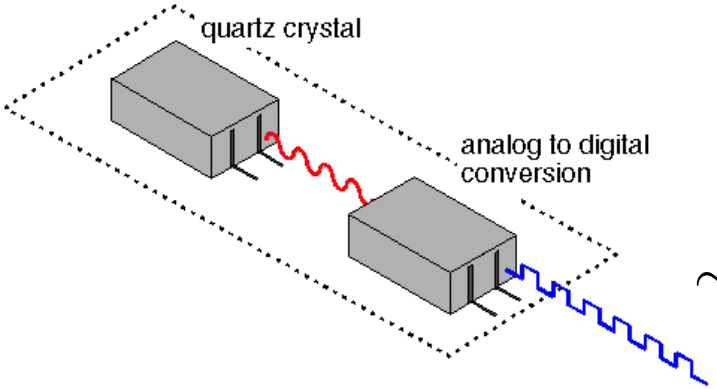

$\sim$ 3 GHz clock rate

This **time-symmetric** signal *drives all logical transformations in a computer*
(program, input memory, working memory, etc. are all part of memory system)

Time-symmetric control of metastable memories

Entropy production required for
time-symmetric control of metastable memories:

$$\frac{1}{k_{\mathrm{B}}} \langle \boldsymbol{\Sigma} \rangle \geq \mathrm{D}_{\mathrm{KL}} \left[\boldsymbol{\mu}_0(m) \Pr\left(\boldsymbol{\mu}_0^{[m]} \xrightarrow{x_{0:\tau}} m' \right) \middle\| \boldsymbol{\mu}_\tau(m') \Pr\left(\boldsymbol{\mu}_\tau^{\dagger[m'^\dagger]} \xrightarrow{\boldsymbol{\mathfrak{R}}(x_{0:\tau})} m^\dagger \right) \right]$$

(with probability elements representing their distributions)

Time-symmetric control of metastable memories

Entropy production required for
$\underbrace{\text{time-symmetric control}}_{\boldsymbol{\mathfrak{R}}(x_{0:\tau})=x_{0:\tau}}$ of metastable memories:

$$\frac{1}{k_{\mathrm{B}}}\langle\boldsymbol{\Sigma}\rangle \geq \mathrm{D}_{\mathrm{KL}}\left[\boldsymbol{\mu}_0(m)\,\Pr\left(\boldsymbol{\mu}_0^{[m]} \xrightarrow{x_{0:\tau}} m'\right) \middle\| \boldsymbol{\mu}_\tau(m')\,\Pr\left(\boldsymbol{\mu}_\tau^{\dagger[m'^\dagger]} \xrightarrow{\boldsymbol{\mathfrak{R}}(x_{0:\tau})} m^\dagger\right)\right]$$

Time-symmetric control of metastable memories

Entropy production required for
$\underbrace{\text{time-symmetric control}}_{\boldsymbol{\mathcal{R}}(x_{0:\tau})=x_{0:\tau}}$ of metastable memories:

$$\frac{1}{k_{\mathrm{B}}}\langle\boldsymbol{\Sigma}\rangle \geq \mathrm{D}_{\mathrm{KL}}\left[\boldsymbol{\mu}_0(m)\,\Pr\left(\boldsymbol{\mu}_0^{[m]} \xrightarrow{x_{0:\tau}} m'\right) \middle\| \boldsymbol{\mu}_\tau(m')\,\Pr\left(\boldsymbol{\mu}_\tau^{\dagger[m'^\dagger]} \xrightarrow{x_{0:\tau}} m^\dagger\right)\right]$$

Time-symmetric control of metastable memories

Entropy production required for
$\underbrace{\text{time-symmetric control}}_{\boldsymbol{\mathcal{R}}(x_{0:\tau})=x_{0:\tau}}$ of $\underbrace{\text{metastable memories}}_{\boldsymbol{\mu}_0^{[m]}=\boldsymbol{\pi}_{x_0}^{[m]},\ \boldsymbol{\mu}_\tau^{[m]}=\boldsymbol{\pi}_{x_\tau}^{[m]}}$:

$$\frac{1}{k_{\mathrm{B}}}\langle\boldsymbol{\Sigma}\rangle \geq \mathrm{D}_{\mathrm{KL}}\Big[\boldsymbol{\mu}_0(m)\Pr\big(\boldsymbol{\mu}_0^{[m]} \xrightarrow{x_{0:\tau}} m'\big)\,\Big\|\,\boldsymbol{\mu}_\tau(m')\Pr\big(\boldsymbol{\mu}_\tau^{\dagger[m'^\dagger]} \xrightarrow{x_{0:\tau}} m^\dagger\big)\Big]$$

Time-symmetric control of metastable memories

Entropy production required for
$\underbrace{\text{time-symmetric control}}_{\boldsymbol{\mathcal{R}}(x_{0:\tau})=x_{0:\tau}}$ of $\underbrace{\text{metastable memories}}_{\boldsymbol{\mu}_0^{[m]}=\boldsymbol{\pi}_{x_0}^{[m]},\ \boldsymbol{\mu}_\tau^{[m]}=\boldsymbol{\pi}_{x_\tau}^{[m]}}$:

$$\frac{1}{k_{\mathrm{B}}}\langle\boldsymbol{\Sigma}\rangle \geq \mathrm{D}_{\mathrm{KL}}\Big[\boldsymbol{\mu}_0(m)\Pr\big(\boldsymbol{\pi}_{x_0}^{[m]} \xrightarrow{x_{0:\tau}} m'\big)\,\Big\|\,\boldsymbol{\mu}_\tau(m')\Pr\big(\boldsymbol{\mu}_\tau^{\dagger[m'^\dagger]} \xrightarrow{x_{0:\tau}} m^\dagger\big)\Big]$$

Time-symmetric control of metastable memories

Entropy production required for
$\underbrace{\text{time-symmetric control}}_{\boldsymbol{\mathcal{R}}(x_{0:\tau})=x_{0:\tau}}$ of $\underbrace{\text{metastable memories}}_{\boldsymbol{\mu}_0^{[m]}=\boldsymbol{\pi}_{x_0}^{[m]},\ \boldsymbol{\mu}_\tau^{[m]}=\boldsymbol{\pi}_{x_\tau}^{[m]}}$:

$$\frac{1}{k_{\mathrm{B}}}\langle\boldsymbol{\Sigma}\rangle \geq \mathrm{D}_{\mathrm{KL}}\Big[\boldsymbol{\mu}_0(m)\Pr\big(\boldsymbol{\pi}_{x_0}^{[m]} \xrightarrow{x_{0:\tau}} m'\big)\ \Big\|\ \boldsymbol{\mu}_\tau(m')\Pr\big(\boldsymbol{\mu}_\tau^{\dagger[m'^\dagger]} \xrightarrow{x_{0:\tau}} m^\dagger\big)\Big]$$

Time-symmetric control of metastable memories

Entropy production required for
$\underbrace{\text{time-symmetric control}}_{\boldsymbol{\mathcal{R}}(x_{0:\tau})=x_{0:\tau}}$ of $\underbrace{\text{metastable memories}}_{\boldsymbol{\mu}_0^{[m]}=\boldsymbol{\pi}_{x_0}^{[m]},\ \boldsymbol{\mu}_\tau^{[m]}=\boldsymbol{\pi}_{x_\tau}^{[m]}}$:

$$\frac{1}{k_{\mathrm{B}}}\langle\boldsymbol{\Sigma}\rangle \geq \mathrm{D}_{\mathrm{KL}}\left[\boldsymbol{\mu}_0(m)\,\Pr\left(\boldsymbol{\pi}_{x_0}^{[m]} \xrightarrow{x_{0:\tau}} m'\right) \middle\| \boldsymbol{\mu}_\tau(m')\,\Pr\left(\boldsymbol{\pi}_{x_\tau}^{\dagger[m'^\dagger]} \xrightarrow{x_{0:\tau}} m^\dagger\right)\right]$$

Time-symmetric control of metastable memories

Entropy production required for
$\underbrace{\text{time-symmetric control}}_{\boldsymbol{\mathcal{R}}(x_{0:\tau})=x_{0:\tau}}$ of $\underbrace{\text{metastable memories}}_{\boldsymbol{\mu}_0^{[m]}=\boldsymbol{\pi}_{x_0}^{[m]},\ \boldsymbol{\mu}_\tau^{[m]}=\boldsymbol{\pi}_{x_\tau}^{[m]}}$:

$$\frac{1}{k_{\mathrm{B}}}\langle\boldsymbol{\Sigma}\rangle \geq \mathrm{D}_{\mathrm{KL}}\Big[\boldsymbol{\mu}_0(m)\Pr\big(\boldsymbol{\pi}_{x_0}^{[m]} \xrightarrow{x_{0:\tau}} m'\big)\ \Big\|\ \boldsymbol{\mu}_\tau(m')\Pr\big(\boldsymbol{\pi}_{x_\tau^\dagger}^{[m'^\dagger]} \xrightarrow{x_{0:\tau}} m^\dagger\big)\Big]$$

Time-symmetric control of metastable memories

Entropy production required for
$\underbrace{\text{time-symmetric control}}_{\boldsymbol{\mathcal{R}}(x_{0:\tau})=x_{0:\tau}}$ of $\underbrace{\text{metastable memories}}_{\boldsymbol{\mu}_0^{[m]}=\boldsymbol{\pi}_{x_0}^{[m]},\ \boldsymbol{\mu}_\tau^{[m]}=\boldsymbol{\pi}_{x_\tau}^{[m]}}$:

$$\frac{1}{k_{\mathrm{B}}}\langle\boldsymbol{\Sigma}\rangle \geq \mathrm{D}_{\mathrm{KL}}\left[\boldsymbol{\mu}_0(m)\,\Pr\left(\boldsymbol{\pi}_{x_0}^{[m]} \xrightarrow{x_{0:\tau}} m'\right) \middle\| \boldsymbol{\mu}_\tau(m')\,\Pr\left(\boldsymbol{\pi}_{x_0}^{[m'^\dagger]} \xrightarrow{x_{0:\tau}} m^\dagger\right)\right]$$

Time-symmetric control of metastable memories

Entropy production required for
$\underbrace{\text{time-symmetric control}}_{\boldsymbol{\mathcal{R}}(x_{0:\tau})=x_{0:\tau}}$ of $\underbrace{\text{metastable memories}}_{\boldsymbol{\mu}_0^{[m]}=\boldsymbol{\pi}_{x_0}^{[m]},\ \boldsymbol{\mu}_\tau^{[m]}=\boldsymbol{\pi}_{x_\tau}^{[m]}}$:

$$\frac{1}{k_{\mathrm{B}}}\langle\boldsymbol{\Sigma}\rangle \geq \mathrm{D}_{\mathrm{KL}}\left[\boldsymbol{\mu}_0(m)\Pr\left(\boldsymbol{\pi}_{x_0}^{[m]} \xrightarrow{x_{0:\tau}} m'\right) \middle\| \boldsymbol{\mu}_\tau(m')\Pr\left(\boldsymbol{\pi}_{x_0}^{[m'^\dagger]} \xrightarrow{x_{0:\tau}} m^\dagger\right)\right]$$

Time-symmetric control of metastable memories

Entropy production required for
$\underbrace{\text{time-symmetric control}}_{\boldsymbol{\mathcal{R}}(x_{0:\tau})=x_{0:\tau}}$ of $\underbrace{\text{metastable memories}}_{\boldsymbol{\mu}_0^{[m]}=\boldsymbol{\pi}_{x_0}^{[m]},\ \boldsymbol{\mu}_\tau^{[m]}=\boldsymbol{\pi}_{x_\tau}^{[m]}}$:

$$\frac{1}{k_{\mathrm{B}}}\langle\boldsymbol{\Sigma}\rangle \geq \mathrm{D}_{\mathrm{KL}}\Big[\boldsymbol{\mu}_0(m)p(m\to m')\,\Big\|\,\boldsymbol{\mu}_\tau(m')p(m'^\dagger\to m^\dagger)\Big]$$

where $\{p(m\to m')\}_{m,m'}$ are the actual transition probabilities between memory states of the computer!

Time-symmetric control of metastable memories

Entropy production required for
$\underbrace{\text{time-symmetric control}}_{\boldsymbol{\mathcal{R}}(x_{0:\tau})=x_{0:\tau}}$ of $\underbrace{\text{metastable memories}}_{\boldsymbol{\mu}_0^{[m]}=\boldsymbol{\pi}_{x_0}^{[m]},\ \boldsymbol{\mu}_\tau^{[m]}=\boldsymbol{\pi}_{x_\tau}^{[m]}}$:

$$\frac{1}{k_{\mathrm{B}}}\langle\boldsymbol{\Sigma}\rangle \geq \mathrm{D}_{\mathrm{KL}}\Big[\boldsymbol{\mu}_0(m)p(m\to m')\,\Big\|\,\boldsymbol{\mu}_\tau(m')p(m'^\dagger\to m^\dagger)\Big]$$

$$= \Delta\mathrm{H}(\mathcal{M}_t) + \sum_{m,m'\in\boldsymbol{\mathcal{M}}} \boldsymbol{\mu}_0(m)p(m\to m')\ln\frac{p(m\to m')}{p(m'^\dagger\to m^\dagger)}$$

where $\{p(m\to m')\}_{m,m'}$ are the actual transition probabilities between memory states of the computer!

Nearly-deterministic computations

Allow a maximal error rate of ϵ in the implementation of an intended deterministic computation $\mathcal{C} : \boldsymbol{\mathcal{M}} \to \boldsymbol{\mathcal{M}}$ for any possible memory input $m \in \boldsymbol{\mathcal{M}}$. For any such reliable computation:

$$p(m \to m') \begin{cases} \geq 1 - \epsilon & \text{if } m' = \mathcal{C}(m) \\ \leq \epsilon & \text{if } m' \neq \mathcal{C}(m) \end{cases} .$$

Nearly-deterministic computations

Allow a maximal error rate of ϵ in the implementation of an intended deterministic computation $\mathcal{C} : \boldsymbol{\mathcal{M}} \to \boldsymbol{\mathcal{M}}$ for any possible memory input $m \in \boldsymbol{\mathcal{M}}$. For any such reliable computation:

$$p(m \to m') \begin{cases} \geq 1 - \epsilon & \text{if } m' = \mathcal{C}(m) \\ \leq \epsilon & \text{if } m' \neq \mathcal{C}(m) \end{cases} .$$

$$\frac{1}{k_{\mathrm{B}}} \langle \boldsymbol{\Sigma} \rangle \geq \Delta \mathrm{H}(\mathcal{M}_t) + \sum_{m,m' \in \boldsymbol{\mathcal{M}}} \boldsymbol{\mu}_0(m) p(m \to m') \ln \frac{p(m \to m')}{p(m'^{\dagger} \to m^{\dagger})}$$

The four cases

$$p(m \to m') = \begin{cases} 1 - \epsilon_m \geq 1 - \epsilon & \text{if } m' = \mathcal{C}(m) \\ \epsilon_{m \to m'} \leq \epsilon_m \leq \epsilon & \text{if } m' \neq \mathcal{C}(m) \end{cases}$$

Let $d(m, m') \equiv p(m \to m') \ln \frac{p(m \to m')}{p(m'^\dagger \to m^\dagger)}$

1. $\mathcal{C}(m) = m'$; $\mathcal{C}(m'^\dagger) = m^\dagger$:

$$-\epsilon \leq d^{(1)}(m, m') \leq \epsilon + \tfrac{1}{2}\epsilon^2 + \mathcal{O}(\epsilon^3) \ .$$

2. $\mathcal{C}(m) = m'$; $\mathcal{C}(m'^\dagger) \neq m^\dagger$:

$$\ln(\epsilon^{-1}) \lesssim d^{(2)}(m, m') \leq \ln(\epsilon^{-1}_{m'^\dagger \to m^\dagger}) \ .$$

3. $\mathcal{C}(m) \neq m'$; $\mathcal{C}(m'^\dagger) = m^\dagger$:

$$\epsilon_{m \to m'} \ln \epsilon_{m \to m'} < d^{(3)}(m, m') < 0 \ .$$

4. $\mathcal{C}(m) \neq m'$; $\mathcal{C}(m'^\dagger) \neq m^\dagger$:

$$-\epsilon/e \leq d^{(4)}(m, m') = \epsilon_{m \to m'} \ln \left(\frac{\epsilon_{m \to m'}}{\epsilon_{m'^\dagger \to m^\dagger}} \right) \ .$$

The four cases

$$p(m \to m') = \begin{cases} 1 - \epsilon_m \geq 1 - \epsilon & \text{if } m' = \mathcal{C}(m) \\ \epsilon_{m \to m'} \leq \epsilon_m \leq \epsilon & \text{if } m' \neq \mathcal{C}(m) \end{cases}$$

Let $d(m, m') \equiv p(m \to m') \ln \frac{p(m \to m')}{p(m'^\dagger \to m^\dagger)}$

1. $\mathcal{C}(m) = m'$; $\mathcal{C}(m'^\dagger) = m^\dagger$:

$$-\epsilon \leq d^{(1)}(m, m') \leq \epsilon + \tfrac{1}{2}\epsilon^2 + \mathcal{O}(\epsilon^3) \ .$$

2. $\mathcal{C}(m) = m'$; $\mathcal{C}(m'^\dagger) \neq m^\dagger$:

$$\boxed{\ln(\epsilon^{-1}) \lesssim d^{(2)}(m, m') \leq \ln(\epsilon^{-1}_{m'^\dagger \to m^\dagger}) \ .}$$

3. $\mathcal{C}(m) \neq m'$; $\mathcal{C}(m'^\dagger) = m^\dagger$:

$$\epsilon_{m \to m'} \ln \epsilon_{m \to m'} < d^{(3)}(m, m') < 0 \ .$$

4. $\mathcal{C}(m) \neq m'$; $\mathcal{C}(m'^\dagger) \neq m^\dagger$:

$$-\epsilon/e \leq d^{(4)}(m, m') = \epsilon_{m \to m'} \ln \left(\frac{\epsilon_{m \to m'}}{\epsilon_{m'^\dagger \to m^\dagger}} \right) \ .$$

Main result

$$\frac{1}{k_{\mathrm{B}}} \left\langle \boldsymbol{\Sigma}^{(t\text{-sym})} \right\rangle + \mathcal{O}(\epsilon \ln \epsilon) > \Delta \mathrm{H}(\mathcal{M}_t) + \ln(1/\epsilon) \sum_{m \neq \mathcal{C}(\mathcal{C}(m)^\dagger)^\dagger} \boldsymbol{\mu}_0(m)$$

PM Riechers, AB Boyd, GW Wimsatt, JP Crutchfield, "Balancing Error and Dissipation in Highly-Reliable Computing", arXiv:1909.06650

For nonreciprocated transitions:
dissipation must *diverge* as $\epsilon \to 0$!

Main result (assuming a single thermal bath: $W_{\text{diss}} = W - \Delta\mathcal{F}_t$)

$$\beta \langle W_{\text{diss}}^{(t\text{-sym})} \rangle + \mathcal{O}(\epsilon \ln \epsilon) > \Delta \mathrm{H}(\mathcal{M}_t) + \ln(1/\epsilon) \sum_{m \neq \mathcal{C}(\mathcal{C}(m)^\dagger)^\dagger} \boldsymbol{\mu}_0(m)$$

PM Riechers, AB Boyd, GW Wimsatt, JP Crutchfield, "Balancing Error and Dissipation in Highly-Reliable Computing", arXiv:1909.06650

Alternatively
(if memory states have equal local-equilibrium free energy):

$$\langle W_{\text{min}}^{(t\text{-sym})} \rangle + \mathcal{O}(k_{\mathrm{B}} T \epsilon \ln \epsilon) = k_{\mathrm{B}} T \ln(1/\epsilon) \sum_{m \neq \mathcal{C}(\mathcal{C}(m)^\dagger)^\dagger} \boldsymbol{\mu}_0(m)$$

For nonreciprocated transitions:
significant work is necessary to ensure reliability

Reciprocity ≠ logical reversibility

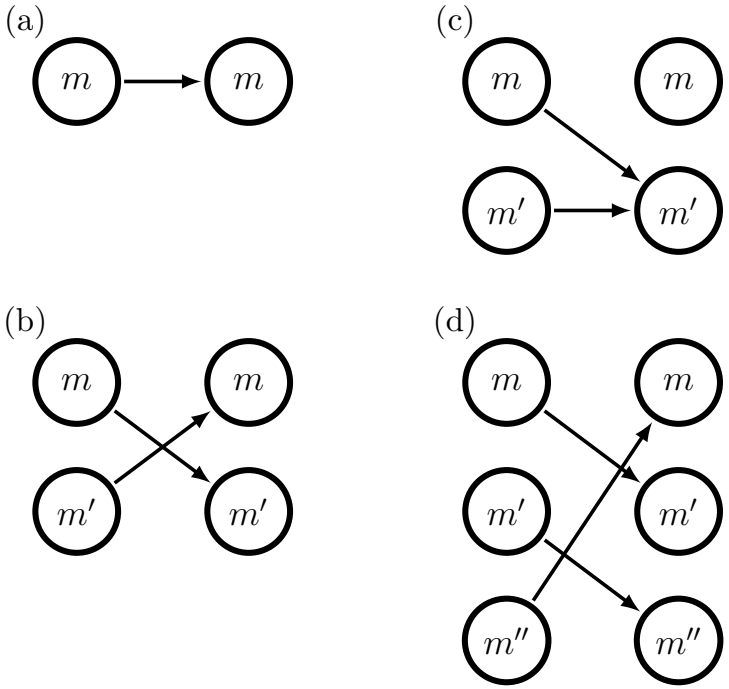

$$\text{Minimal Work } \langle W_{\min}^{t\text{-sym}} \rangle \approx k_{\mathrm{B}} T \ln(1/\epsilon) \sum_{m \neq \mathcal{C}(\mathcal{C}(m)^{\dagger})^{\dagger}} \boldsymbol{\mu}_0(m)$$

Reciprocity ≠ logical reversibility

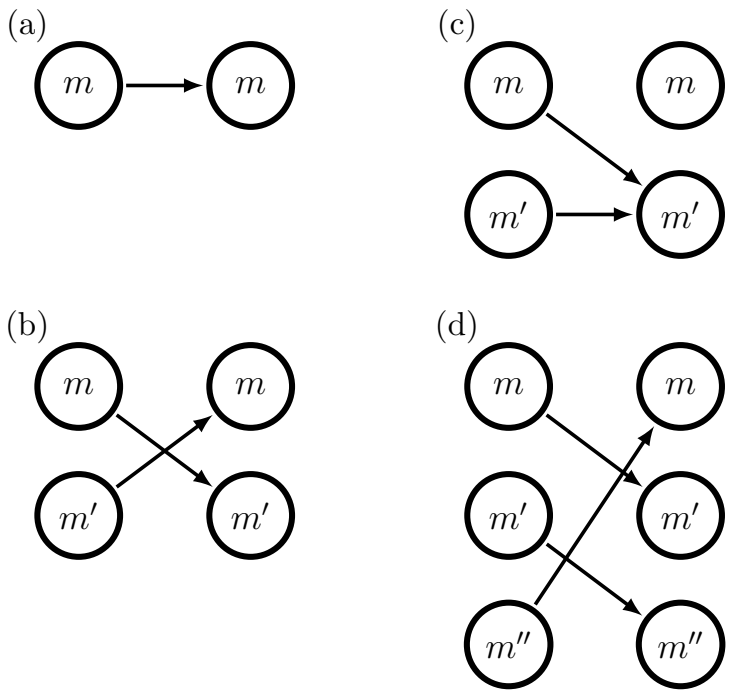

Reciprocated Non-reciprocated

$$\text{Minimal Work } \langle W_{\min}^{t\text{-sym}} \rangle \approx k_{\mathrm{B}} T \ln(1/\epsilon) \sum_{m \neq \mathcal{C}(\mathcal{C}(m))} \boldsymbol{\mu}_0(m)$$

(assuming $m^\dagger = m$)

Erasure, by any means

Exact analysis:

$$\beta \langle W^{t\text{-sym}} \rangle \geq \left(\boldsymbol{\mu}_0(\mathrm{R}) - \langle \epsilon_m \rangle \right) \ln \frac{1-\epsilon_\mathrm{R}}{\epsilon_\mathrm{L}}$$

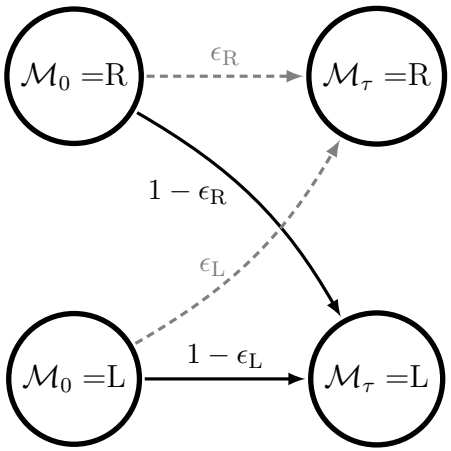

Low-ϵ analysis:

$$\sum_{m \neq \mathcal{C}_\mathrm{erase}(\mathcal{C}_\mathrm{erase}(m))} \boldsymbol{\mu}_0(m) = \boldsymbol{\mu}_0(\mathrm{R})$$

$$\implies \langle W^{t\text{-sym}}_\mathrm{min} \rangle \approx \boldsymbol{\mu}_0(\mathrm{R}) \ln(1/\epsilon)\, k_\mathrm{B} T$$

Erasure via Arrhenius rate dynamics

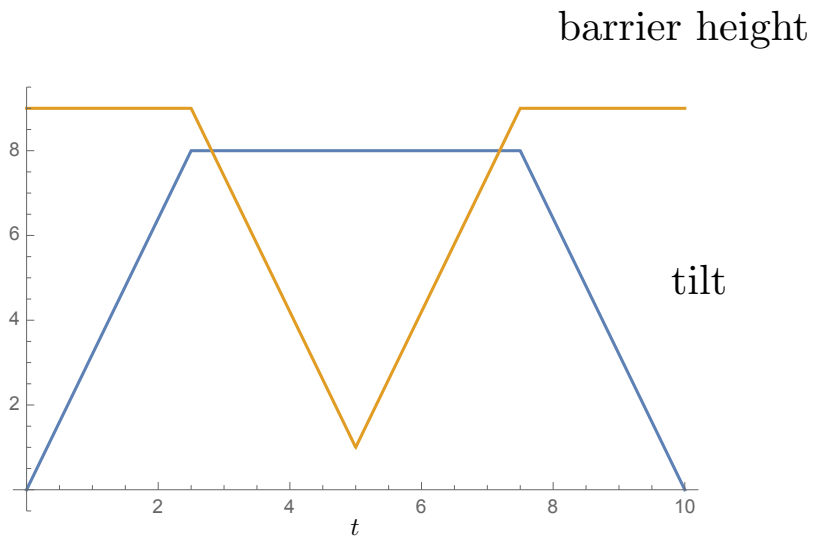

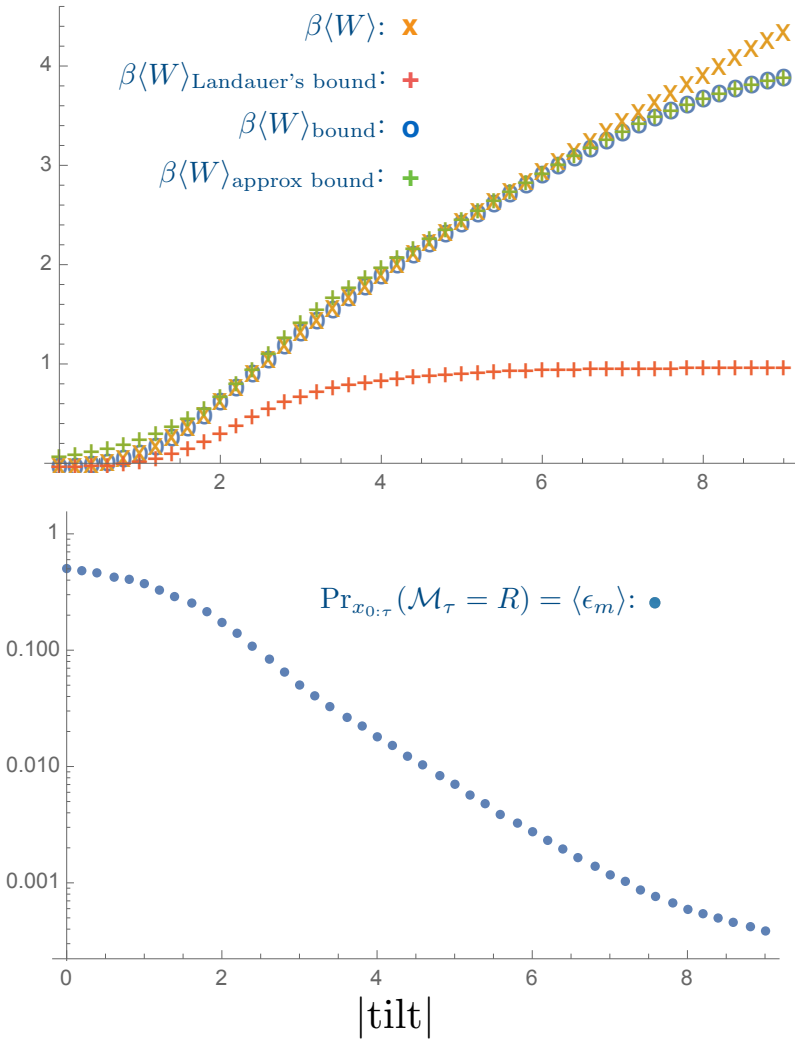

Erasure via underdamped Langevin dynamics

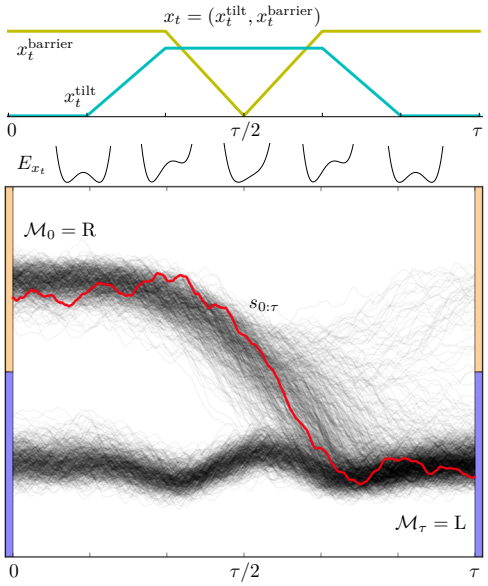

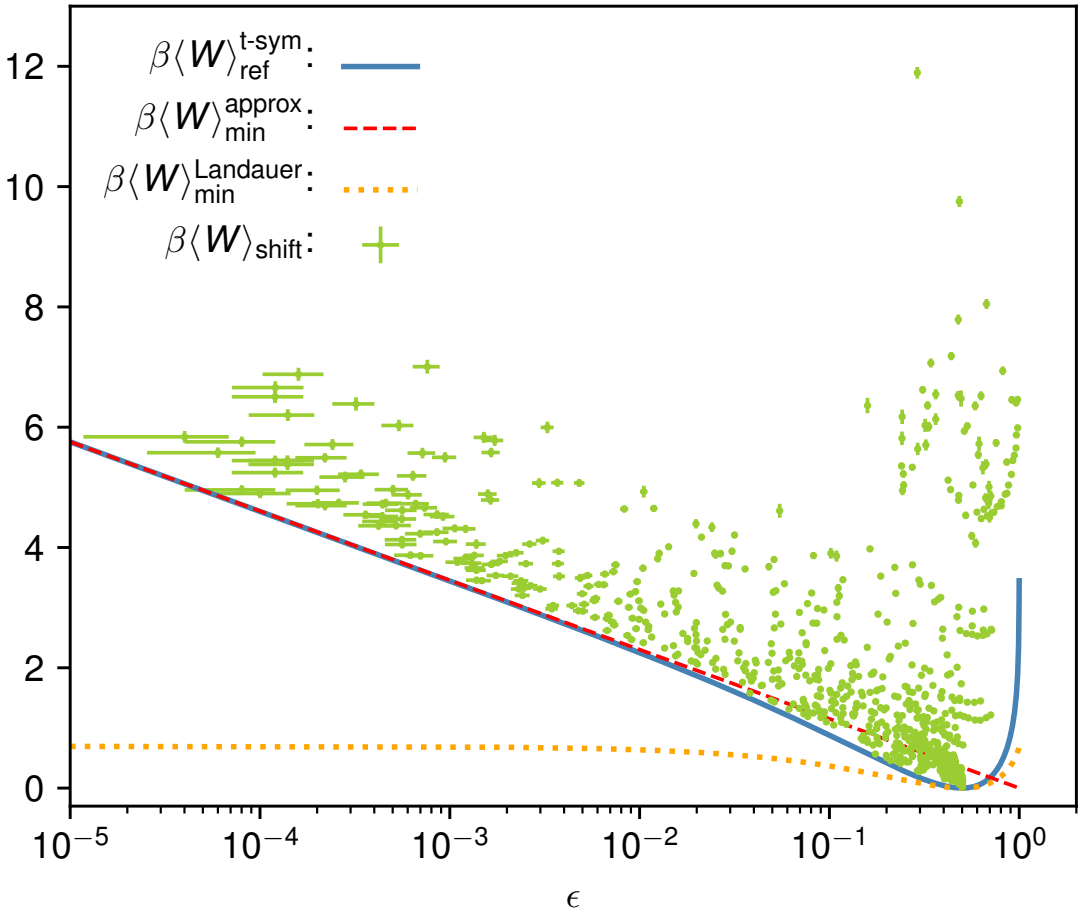

NAND gate

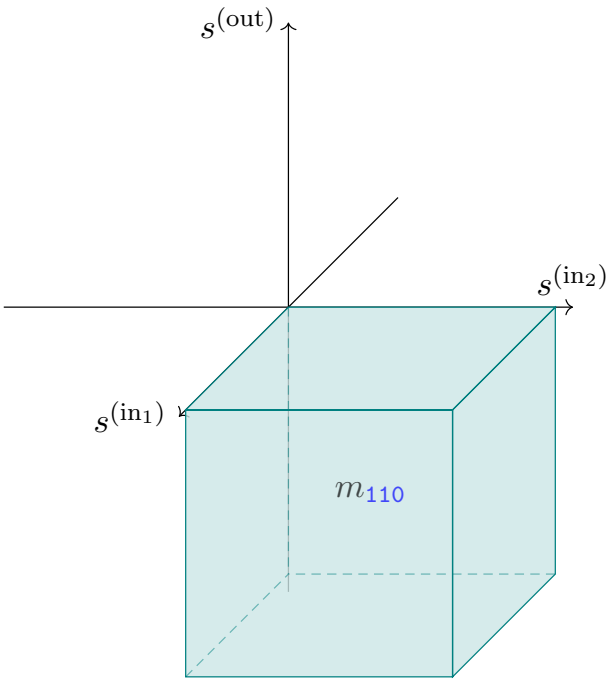

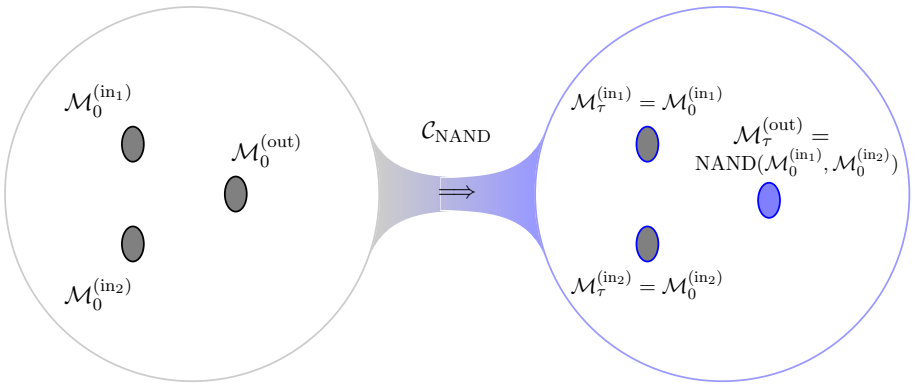

$$\mathcal{M}_t = (\mathcal{M}_t^{(\mathrm{in}_1)}, \mathcal{M}_t^{(\mathrm{in}_2)}, \mathcal{M}_t^{(\mathrm{out})})$$

The NAND computation $\mathcal{C}_{\mathrm{NAND}}$ is given by the mappings:

$000 \mapsto 001$	$001 \mapsto 001$
$010 \mapsto 011$	$011 \mapsto 011$
$100 \mapsto 101$	$101 \mapsto 101$
$111 \mapsto 110$	$110 \mapsto 110$

NAND gate

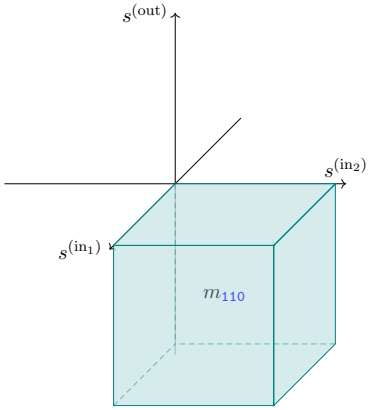

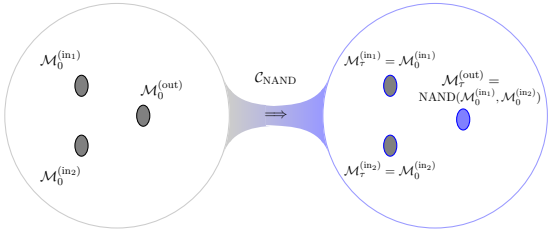

$$\mathcal{M}_t = (\mathcal{M}_t^{(\mathrm{in}_1)}, \mathcal{M}_t^{(\mathrm{in}_2)}, \mathcal{M}_t^{(\mathrm{out})})$$

The NAND computation $\mathcal{C}_{\mathrm{NAND}}$ is given by the mappings:

$\mathtt{000} \mapsto \mathtt{001}$	$\mathtt{001} \mapsto \mathtt{001}$
$\mathtt{010} \mapsto \mathtt{011}$	$\mathtt{011} \mapsto \mathtt{011}$
$\mathtt{100} \mapsto \mathtt{101}$	$\mathtt{101} \mapsto \mathtt{101}$
$\mathtt{111} \mapsto \mathtt{110}$	$\mathtt{110} \mapsto \mathtt{110}$

$$\sum_{m \neq \mathcal{C}_{\mathrm{NAND}}(\mathcal{C}_{\mathrm{NAND}}(m))} \boldsymbol{\mu}_0(m) = \boldsymbol{\mu}_0(m_{\mathtt{000}}) + \boldsymbol{\mu}_0(m_{\mathtt{010}}) + \boldsymbol{\mu}_0(m_{\mathtt{100}}) + \boldsymbol{\mu}_0(m_{\mathtt{111}})$$

$$\implies \langle W_{\min}^{t\text{-sym}} \rangle \approx k_{\mathrm{B}} T \big(\boldsymbol{\mu}_0(m_{\mathtt{000}}) + \boldsymbol{\mu}_0(m_{\mathtt{010}}) + \boldsymbol{\mu}_0(m_{\mathtt{100}}) + \boldsymbol{\mu}_0(m_{\mathtt{111}}) \big) \ln(1/\epsilon)$$

NAND gate

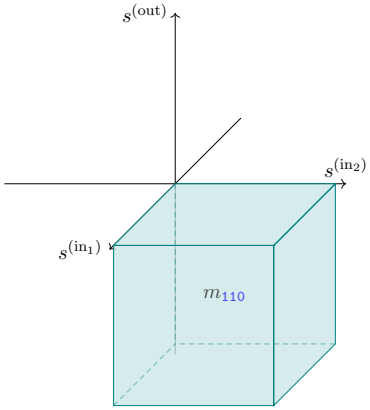

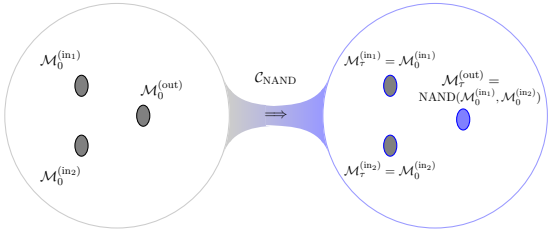

$$\mathcal{M}_t = (\mathcal{M}_t^{(\mathrm{in}_1)}, \mathcal{M}_t^{(\mathrm{in}_2)}, \mathcal{M}_t^{(\mathrm{out})})$$

The NAND computation $\mathcal{C}_{\mathrm{NAND}}$ is given by the mappings:

$\mathtt{000} \mapsto \mathtt{001}$	$\mathtt{001} \mapsto \mathtt{001}$
$\mathtt{010} \mapsto \mathtt{011}$	$\mathtt{011} \mapsto \mathtt{011}$
$\mathtt{100} \mapsto \mathtt{101}$	$\mathtt{101} \mapsto \mathtt{101}$
$\mathtt{111} \mapsto \mathtt{110}$	$\mathtt{110} \mapsto \mathtt{110}$

$$\sum_{m \neq \mathcal{C}_{\mathrm{NAND}}(\mathcal{C}_{\mathrm{NAND}}(m))} \boldsymbol{\mu}_0(m) = \boldsymbol{\mu}_0(m_{\mathtt{000}}) + \boldsymbol{\mu}_0(m_{\mathtt{010}}) + \boldsymbol{\mu}_0(m_{\mathtt{100}}) + \boldsymbol{\mu}_0(m_{\mathtt{111}})$$

$$\Longrightarrow \langle W_{\min}^{t\text{-sym}} \rangle \approx k_{\mathrm{B}} T \big(\boldsymbol{\mu}_0(m_{\mathtt{000}}) + \boldsymbol{\mu}_0(m_{\mathtt{010}}) + \boldsymbol{\mu}_0(m_{\mathtt{100}}) + \boldsymbol{\mu}_0(m_{\mathtt{111}}) \big) \ln(1/\epsilon)$$

$$\text{vs.} \quad \langle W_{\min}^{\mathrm{Landauer}} \rangle = -k_{\mathrm{B}} T \, \Delta \mathrm{H}(\mathcal{M}_t) \approx k_{\mathrm{B}} T \, \mathrm{H}\big(\mathcal{M}_0^{(\mathrm{out})} \big| \mathcal{M}_0^{(\mathrm{in}_1)}, \mathcal{M}_0^{(\mathrm{in}_2)}\big) \, .$$

Is time-symmetric control relevant?

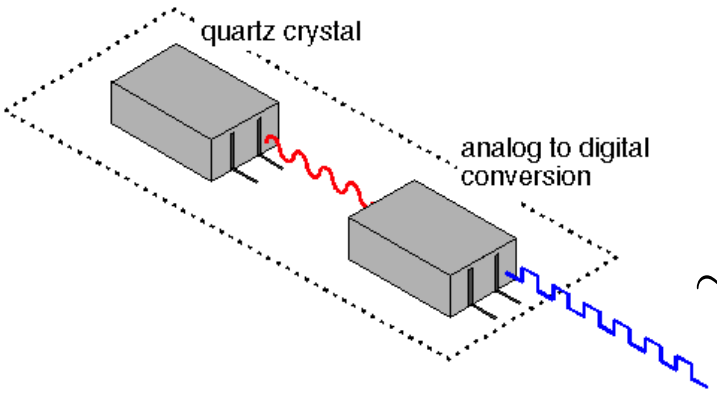

$\sim$ 3 GHz clock rate

This **time-symmetric** signal *drives all logical transformations in a computer*
(program, input memory, working memory, etc. are all part of memory system)

Extreme reliability $\rightarrow$ $\sim$ **$30k_BT$ dissipation per logic transformation**

$\gtrsim$ 40 times the Landauer bound

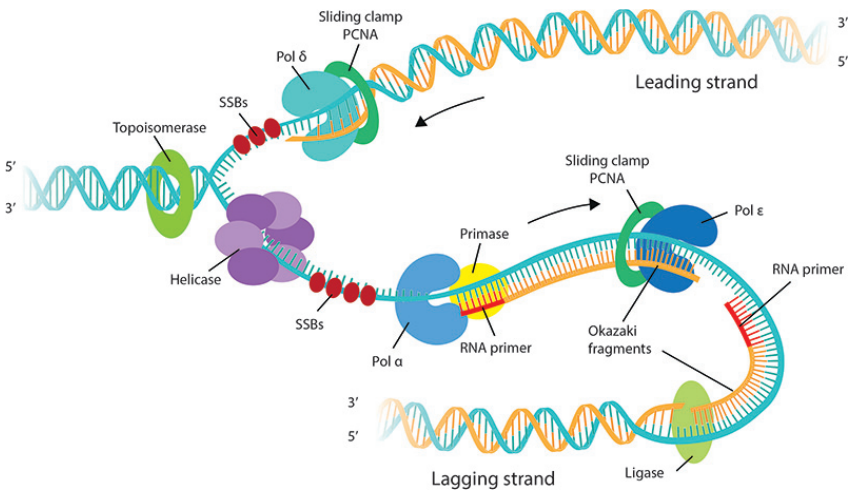

Consequence for reliable biological functionality.

ATP $\rightarrow$ ADP + P_i yields $\sim$ 30 kJ / mol $\approx$ 12 - 25 $k_B T$ per ATP

- Biological systems in NESS
- Biological system transitioning *between* NESSs

Avoiding the Error–Dissipation tradeoff

Use less reliable components with error correction?

Avoiding the Error–Dissipation tradeoff

~~Use less reliable components with error correction?~~
(Doesn't help)

Avoiding the Error–Dissipation tradeoff

Three ways to avoid the error–dissipation tradeoff

1. Engineer the time-reversal symmetries of the memory elements for special purpose computations
   (How? Alec Boyd's talk, tomorrow!)
2. Use time-asymmetric control
   (Hidden costs of time asymmetry?)
3. Intertial computing—avoid metastability
   (Problematic but interesting!)

Thanks!

This talk is based on:

PM Riechers, AB Boyd, GW Wimsatt, and JP Crutchfield, "Balancing Error and Dissipation in Highly-Reliable Computing", arXiv:1909.06650

. . . and related work in progress.

Also relevant to this workshop:

Paul M. Riechers and Mile Gu, "Initial-State Dependence of Thermodynamic Dissipation for any Quantum Process", arXiv:2002.11425

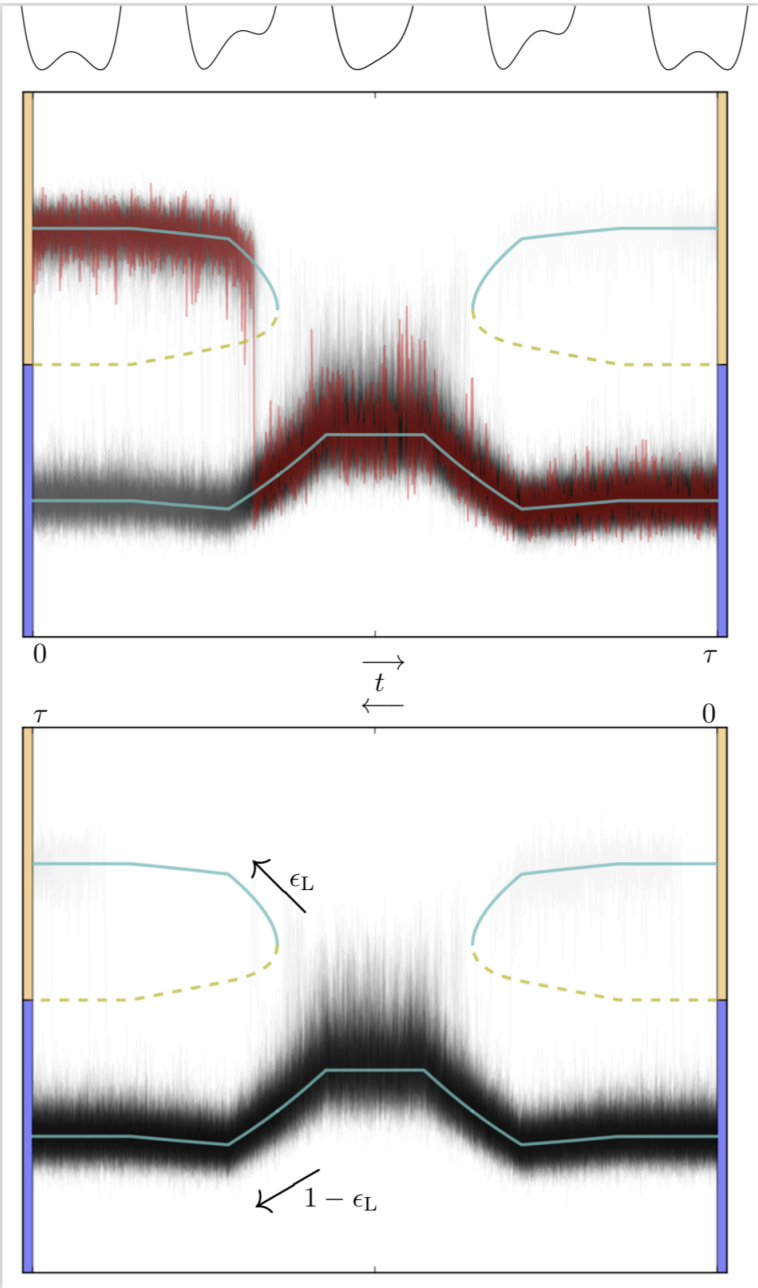

Time-symmetric control of metastable memories can only achieve reliable nonreciprocated transitions via loss of stability and subsequent dissipation.

This trouble is topologically guaranteed!

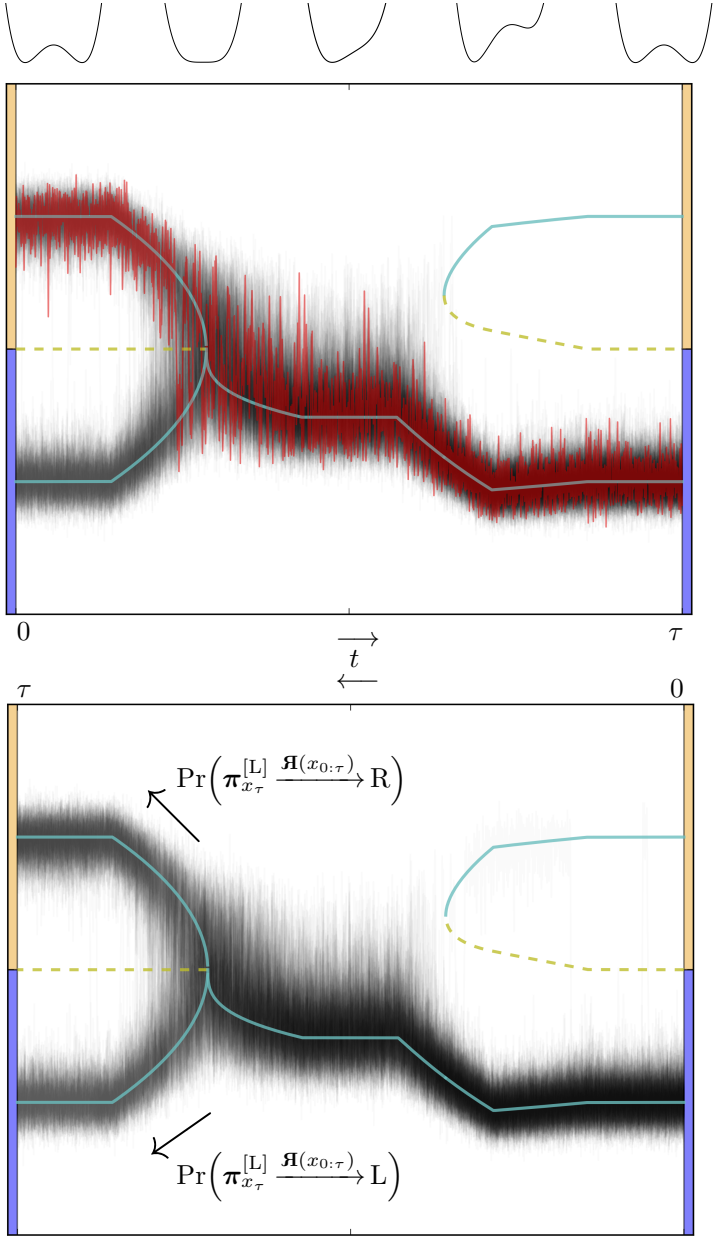

Time-*asymmetric* control can be used to guide the probability density reliably, while maintaining metastability.

$$W_{\min}^{t\text{-sym}}(m \to m') = F_{x_0}^{(m')} - F_{x_0}^{(m)} + k_{\mathrm{B}} T \ln \frac{p(m \to m')}{p(m'^{\dagger} \to m^{\dagger})}$$